TeensyTrack Picoballoon Tracker

Super-pressure / zero-pressure balloon systems have been one of my biggest interests. I developed and launched a <6g solar-powered tracker on a micro super-pressure balloon that has completed 6 flights, the longest of which lasting 121 days and completing 11 circumnavigations of the globe.

Schematic and notes on second page!

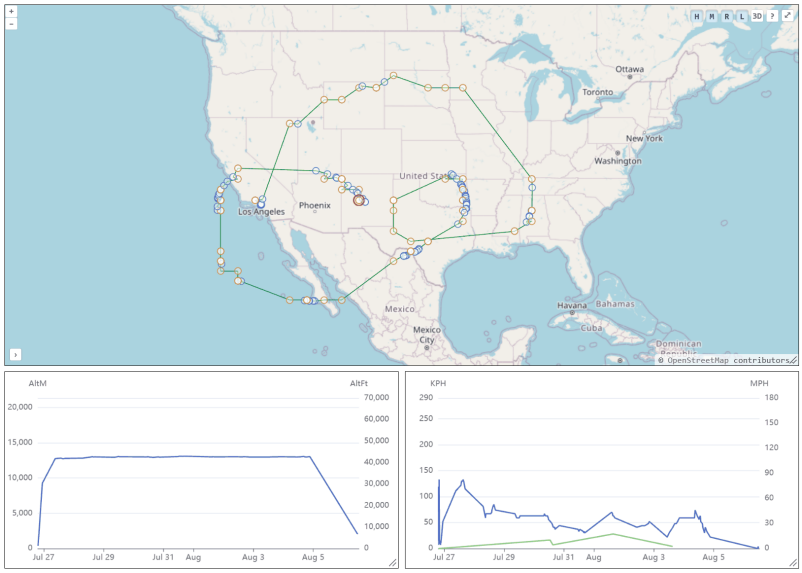

Flight track with altitude and speed telemetry, received over WSPR



Flight-ready tracker with solar cells

Specs:

- Mass: 5.5g
- Power input: 0.6V – 3V. Boosted up to 3.3V
- TX: 20mW 1-30 MHz WSPR/RTTY/CW
- Cost per launch: Under $20!



Releasing a tracker



Two trackers with solar cells optimized for low solar angle operation. Worked down to 0 degrees!

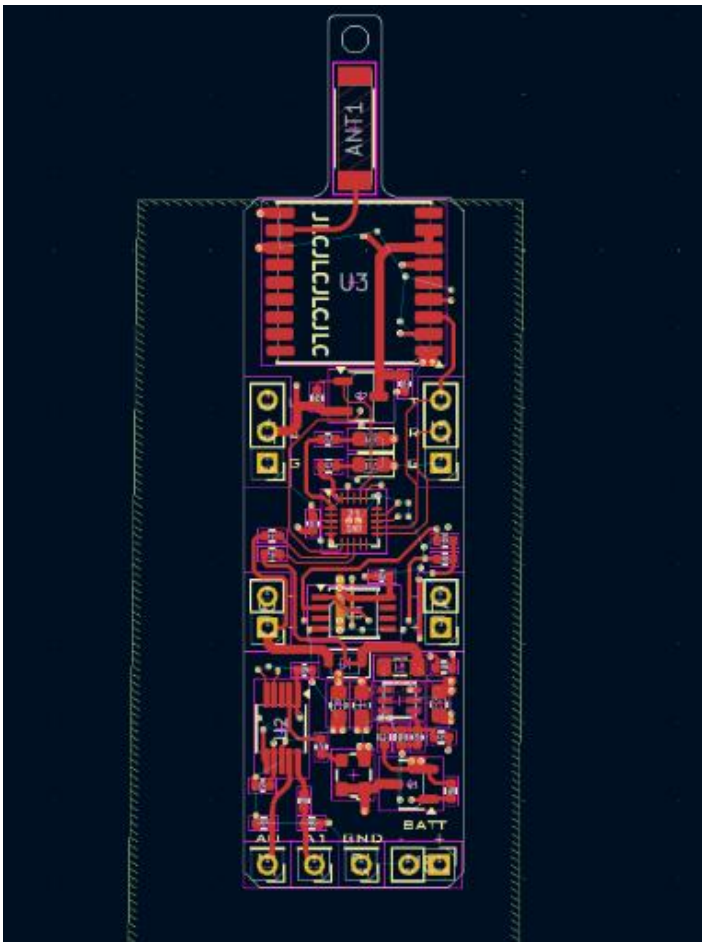

PCB layout

I use a SI5351a clock generator as a makeshift HF transmitter for this tracker. By using the output invert functionality of the IC, I can drive two dipole antenna legs 180 degrees apart, achieving true differential drive and higher output power. My favorite low solar energy hack that I came up with was a routine that runs once per cycle to ramp up the TX IC's output power while saving its current state to EEPROM. If a brown-out is detected, the last saved output power can be used for TX allowing the tracker to continue to function when normal full power output would cause a brownout.

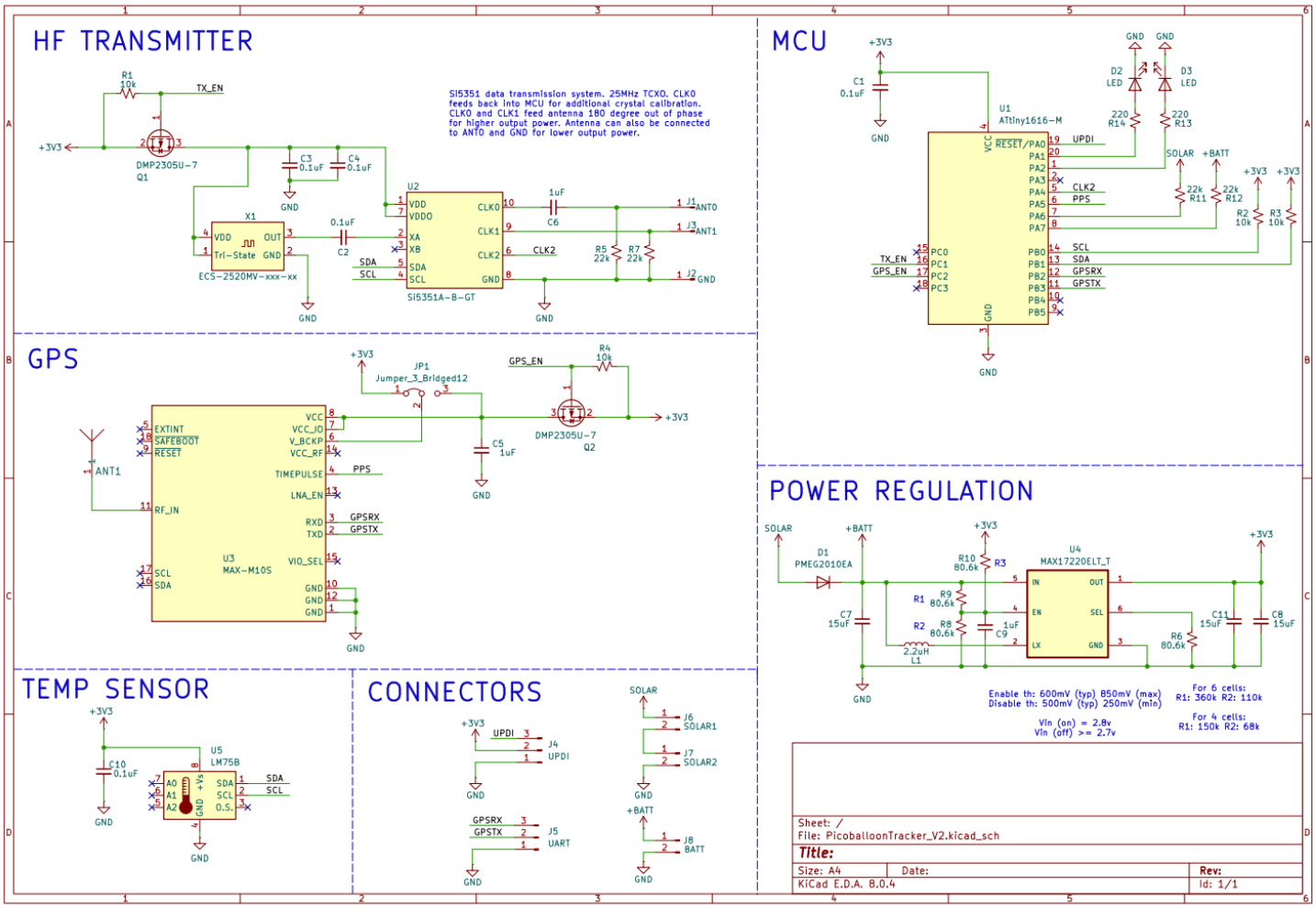

While I don't believe this to be my most technically impressive project, it is one of my favorites, and I believe it is especially relevant to WindBorne's work! I am currently working on a new much more advanced version that includes image capturing abilities with 9600 baud GFSK downlink to global webSDR networks.

You can see more info about this project and others through my full portfolio on the link sent and my website!

https://reverea.dev/teensytrack/

Some other projects:

