Vera Fodor

Orlando, FL | U.S. Citizen | (407) 716-1691 | vera.fodor@ucf.edu
Portfolio: **reverea.dev** | linkedin.com/in/verafodor

Scan for portfolio

Technical Portfolio

RF & Microwave Engineering | UCF Electrical Engineering, May 2028 | SpaceX Starship RF Intern



433 MHz blade antenna designed for a Mach 2 rocket



TeensyTrack: <6 g solar picoballoon tracker, 121-day flight



Onboard view from my 2.4 GHz HD video downlink

Contents

433 MHz Blade Antenna for Supersonic Rockets 2
Solar-Powered High-Altitude Picoballoon Telemetry System 4
Rocketry Avionics and Telemetry Systems 6
MXOD Hypersonic Flight Experiment 8
Additional Projects 10

Technical Skills

RF & Microwave: Antenna design, mmWave/RF PCB design, impedance matching, full-wave EM simulation, SDR/DSP
Test & Measurement: VNA, spectrum analyzer, oscilloscope, hardware bring-up/debug, environmental testing
Hardware & Firmware: Multilayer PCBs, power electronics, MIL-SPEC harnessing, C/C++, low-power firmware
Software: Siemens Xpedition, Altium, KiCad, ANSYS HFSS, SolidWorks, Siemens NX, MATLAB, Python, Git
Certifications: FCC Amateur Radio General Class (KM4VXF), FAA Student Pilot Certificate

Education

University of Central Florida **Aug 2023 – May 2028**
Bachelor of Science in Electrical Engineering (RF & Microwave Track) | GPA: 3.6 *Burnett Honors College*

Publications

J. Koller, A. Shack, A. R. Kotler, S. Smith, Y. Fuentes, A. Siddiqi, **R. Fodor**, G. Gonzalez, J. D. Sprunger, and K. A. Ahmed, "MXOD Flight 1: Feed System and Electronics Architecture," *AIAA SciTech Forum*, 2026. doi:10.2514/6.2026-0346

433 MHz Blade Antenna for Supersonic Rockets

Knights Experimental Rocketry *Jan 2024 – Apr 2024*

Antenna Design | ANSYS HFSS Simulation | SolidWorks | Machining | VNA Measurement

Carbon-fiber airframes block RF, so telemetry from a supersonic rocket needs an antenna outside the skin that survives the flight loads and adds little drag.

- Designed an external inverted-F blade antenna in ANSYS HFSS for telemetry from a Mach 2 carbon-fiber rocket, iterating geometry against S_{11} return loss and far-field gain (4 dBi peak).
- Redesigned with UCF machinists into a manufacturable three-piece aluminum/Delrin assembly; produced the SolidWorks model and full manufacturing drawings and coordinated machining.
- A sliding Delrin dielectric tunes the feed point after assembly. Tuned to 433 MHz on a VNA, with measured bandwidth and match consistent with simulation.

Key specs

433 MHz	**Mach 2**	**Inverted-F**	**4 dBi**	**−19 dB**	**15 MHz**
tuned frequency	design vehicle	external blade	peak gain	measured S_{11}	−10 dB bandwidth

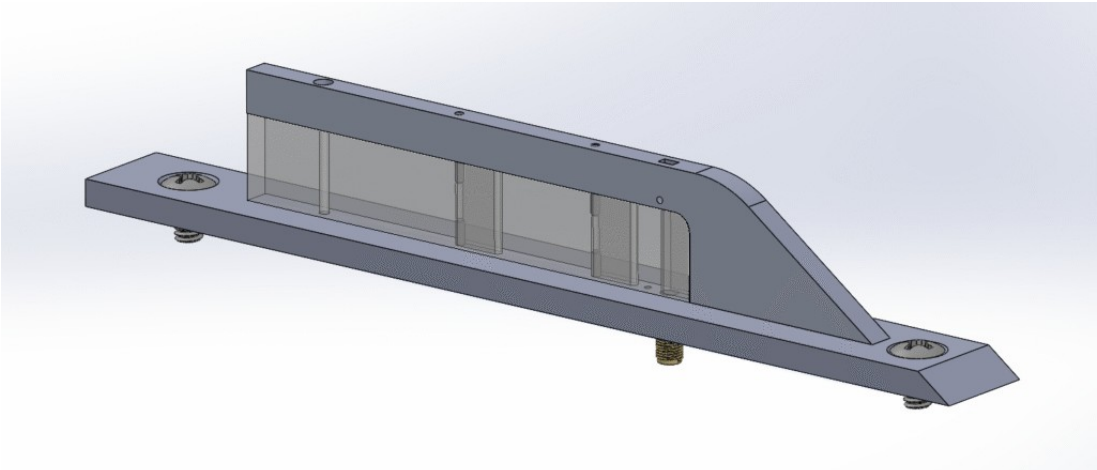

SolidWorks CAD model of the blade antenna



Assembled antenna: machined aluminum base and blade with Delrin dielectric

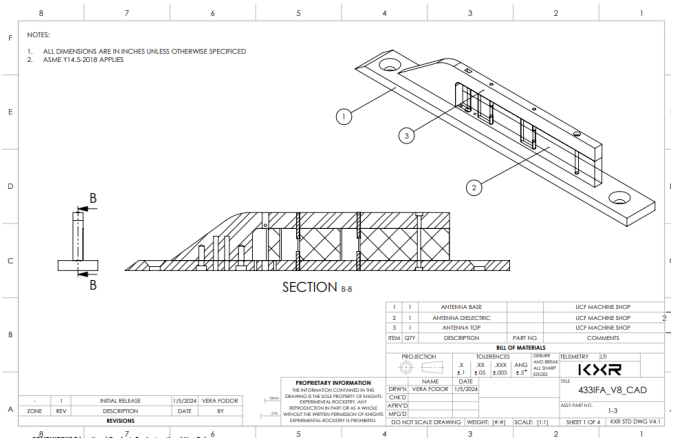

Manufacturing drawing overview

Technical details continued on page 3 →

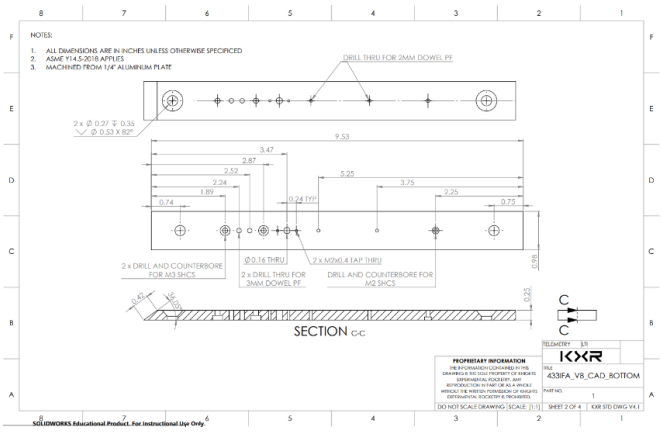

Manufacturing drawing: base

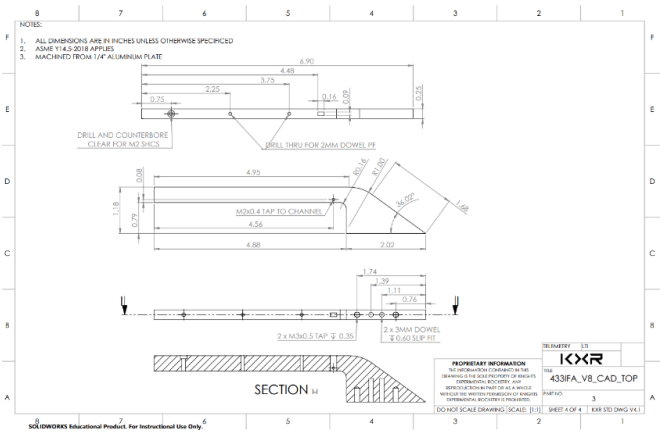

Manufacturing drawing: top

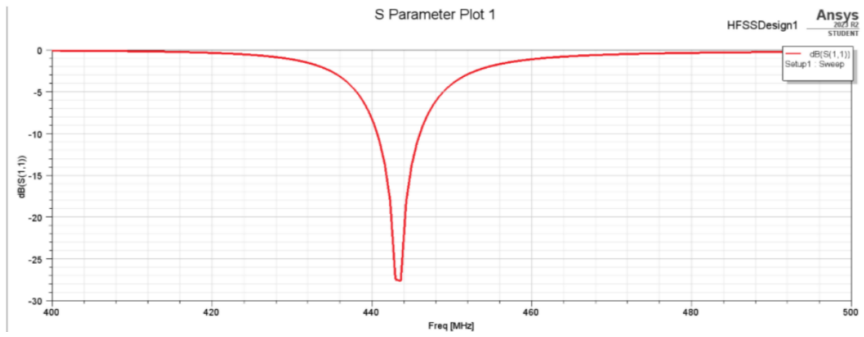

HFSS S_{11} of the as-modeled geometry, resonant near 443 MHz. The sliding Delrin dielectric was used to tune the assembled antenna to 433 MHz.

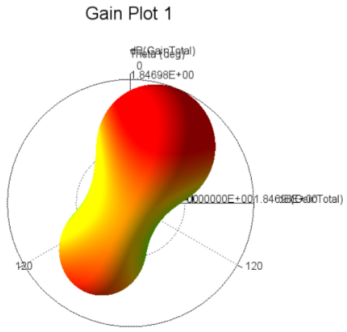

HFSS 3D far-field gain pattern, 4 dBi peak

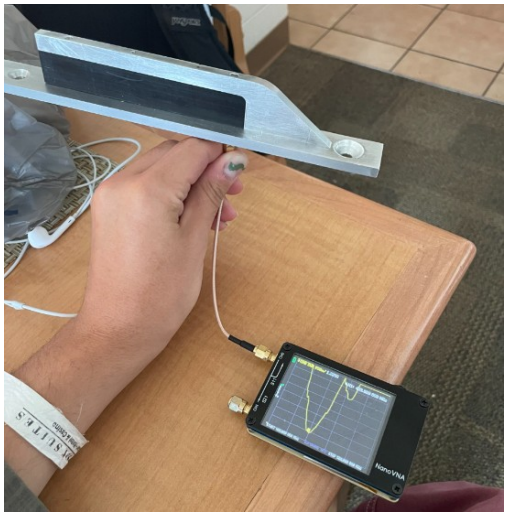

Measuring S_{11} of the assembled antenna on a NanoVNA



Disassembled: base, Delrin dielectric, and blade

See additional details

reverea.dev/433-mhz-custom-designed-blade-antenna...

Solar-Powered High-Altitude Picoballoon Telemetry System

Personal Project *2019 – Present*

Multilayer RF PCB Design | HF Telemetry (WSPR) | Low-Power Firmware | Solar Power Management

TeensyTrack is a <6 g solar-powered balloon tracker that reports its position over HF through the worldwide WSPR amateur radio network. **Longest flight: 121 days aloft and 11 circumnavigations of the globe.**

- Launched 6 solar-powered picoballoons to 40,000–50,000 ft; the longest flight lasted 121 days and circumnavigated the globe 11 times.
- Designed a <6 g, 4-layer impedance-controlled tracker PCB integrating GPS, an ATtiny MCU, and a 10 mW Si5351-based HF transmitter with differential dipole feed and harmonic filtering.
- Wrote a compact WSPR encoding library from scratch for strict MCU memory limits; engineered solar power management with hysteretic boost enable to eliminate brown-outs at sunrise.

Key specs

<6 g	10 mW	6	121 days	11	40–50k ft
flight tracker	HF, Si5351	launches	longest flight	circumnavigations	float altitude

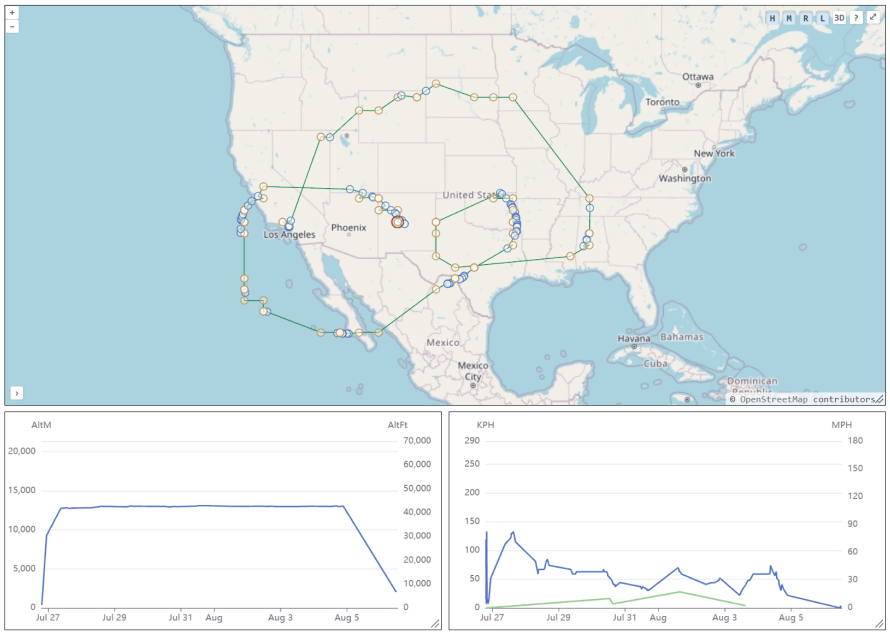

Flight track with altitude and speed telemetry, received over WSPR



Flight-ready tracker with solar cells



Releasing a tracker

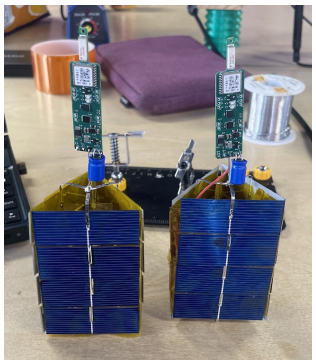

Two trackers with the optimized solar-cell layout

> **Next revision (in progress)**
> Image downlink from the balloon, received with my own SDR-based 9600 baud GFSK decoder.

Technical details continued on page 5 →

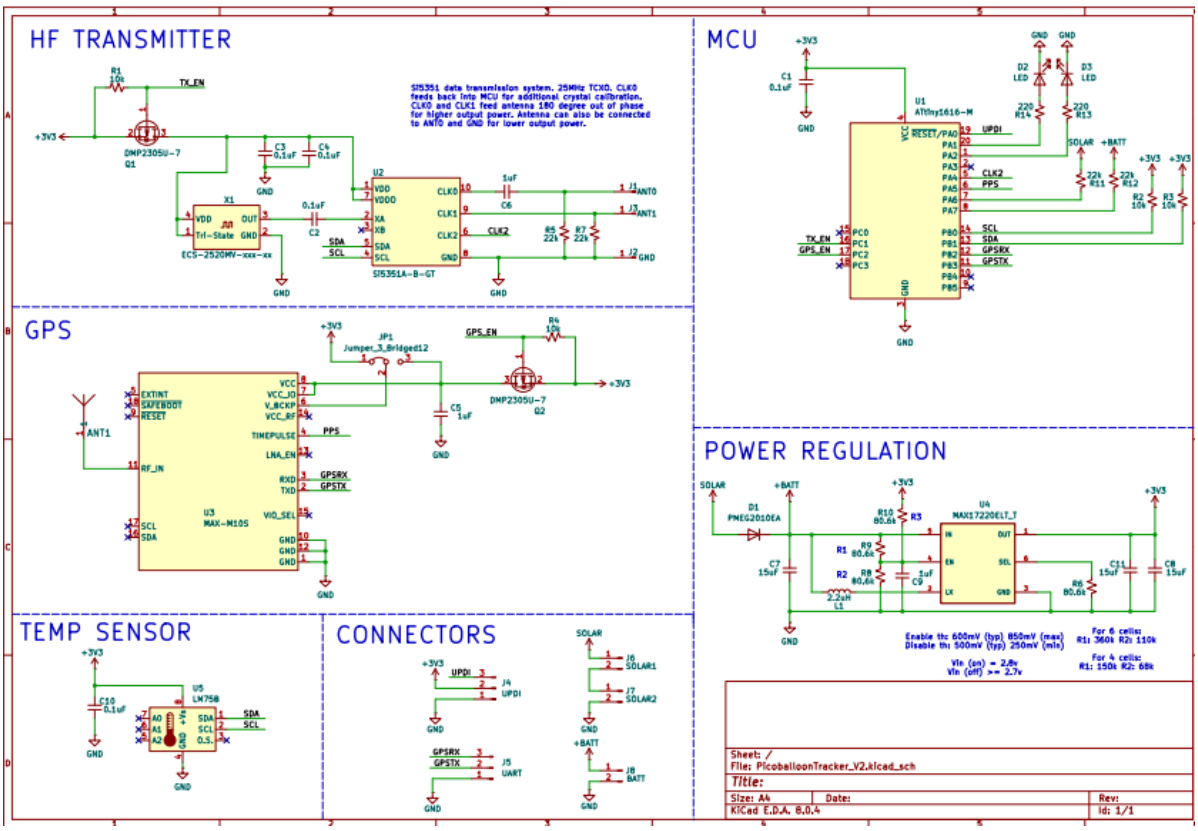

Tracker schematic: HF transmitter, MCU, GPS, power regulation, temperature sensor



Assembled tracker board

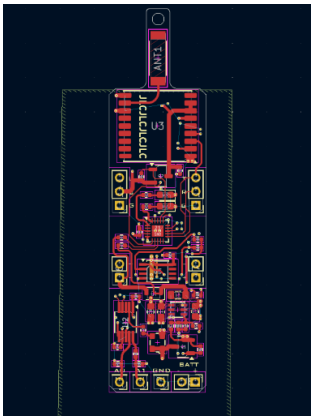

Top-layer PCB layout



PCB front render



PCB back render

See additional details

reverea.dev/teensytrack

Rocketry Avionics and Telemetry Systems

UCF Knights Experimental Rocketry | *Director of Electronic Systems* *Jan 2022 – Aug 2024*

Aerospace Electronics | Multilayer PCB Design | CAN Bus | RF & Video Telemetry

My role: Director of Electronic Systems (executive board, May 2023 – May 2024); led avionics and telemetry design and integration and developed the suite shown here.

- Nose-cone telemetry board, power-distribution module, and video subsystem networked over a vehicle-wide CAN bus and commanded over a 433 MHz, 9600 baud FSK link: the ground station powers subsystems, streams live telemetry and GPS, and manages onboard video.
- Designed multilayer PCB avionics systems for 50+ sensor channels.
- Built a 2.4 GHz HD digital video telemetry system for live high-altitude feeds (>10,000 ft) using modified Wi-Fi hardware; it captured in-flight footage on launch.
- Led avionics for Florida's first collegiate liquid bi-propellant rocket and an ion engine; directed PDR/CDR technical reviews.
- Managed an $80k budget and 700+ members across 8 projects.



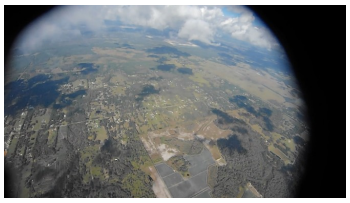

In-flight frame from the 2.4 GHz HD digital video downlink

Key specs

433 MHz	2.4 GHz	>10,000 ft	50+	$80k	700+
9600 baud FSK link	HD digital video	live video altitude	sensor channels	annual budget	members led

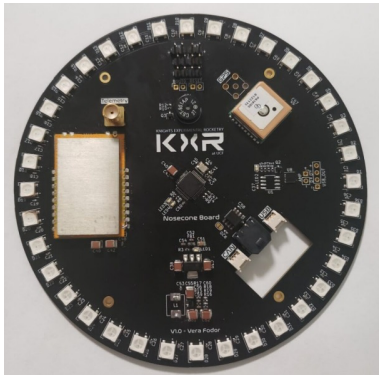

Nose-cone telemetry PCB

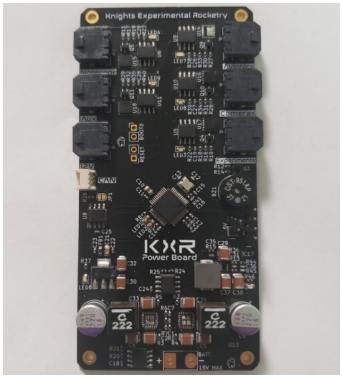

Power-distribution PCB



RF output check on a spectrum analyzer

Downlink budget — *433 MHz, 9600 baud FSK, free space at 10,000 ft*

30 dBm	+	4 dBi	+	11 dBi	−	94.9 dB	=	−49.9 dBm	⇒	62 dB
1 W transmitter		vehicle antenna		ground antenna		path loss		received power		margin over −112 dBm

Far more margin than a 10,000 ft flight needs, with ample headroom for cable, polarization, and pattern losses.

Technical details continued on page 7 →

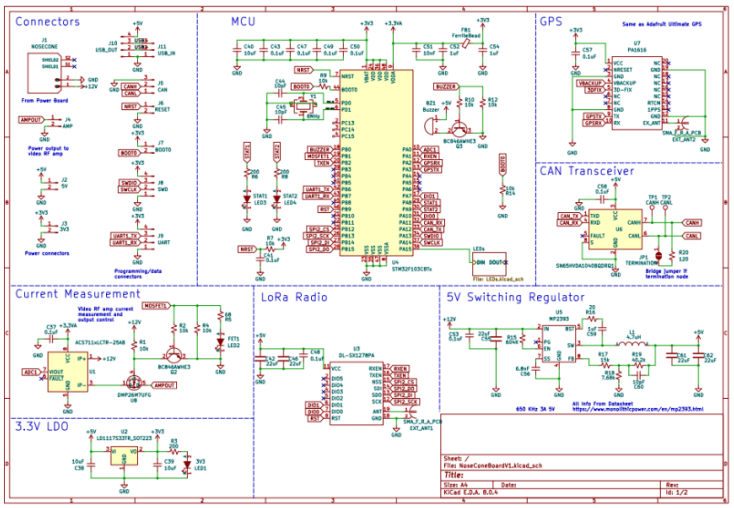

Nose-cone telemetry PCB schematic

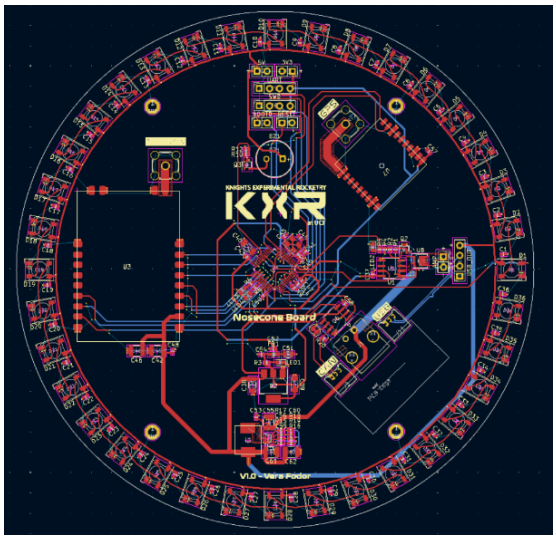

Nose-cone telemetry PCB layout

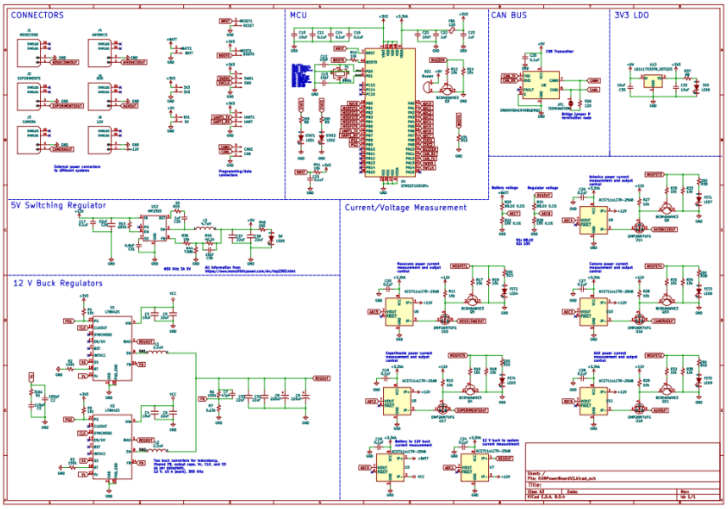

Power-distribution PCB schematic

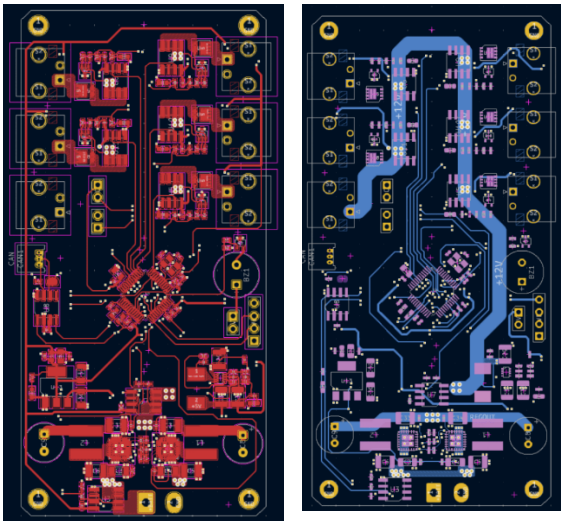

Power-distribution PCB, top and bottom layers

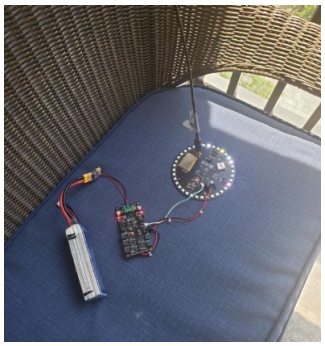

Telemetry and power system bench test



Installing avionics at competition



Electronics CubeSat enclosure



Pegasus launch team

See additional details

reverea.dev/rocketry-avionics...

MXOD Hypersonic Flight Experiment

UCF Propulsion and Energy Research Lab (PERL) | Research Assistant *May 2024 – Jan 2026*

Flight Electronics | High-Rate DAQ | Multilayer PCB Design | Signal Conditioning

My role: I led design and development of the flight electronics for MXOD Flight 1, UCF's hypersonic flight experiment: high-rate DAQ systems and multilayer PCBs for power regulation and signal conditioning across 84 high-sensitivity sensor channels.

- The electronics subsystem records 72 sensors (trench pressure transducers, coaxial thermocouples, triaxial IEPE accelerometers, and current sensors) at up to 20 kHz on 14 SLICE6 AIR 16-bit DAQ units, at test conditions of Mach 9–10 and 25–30 km altitude.
- Presented technical reviews (DDRs, MRRs) to university and U.S. Air Force stakeholders.
- Co-authored the AIAA SciTech 2026 paper on the flight feed system and electronics architecture.

Key specs

Mach 9–10	25–30 km	84	14	16-bit	20 kHz
test condition	altitude at condition	channels, 72 sensors	SLICE6 AIR DAQs	ADC resolution	max sampling rate

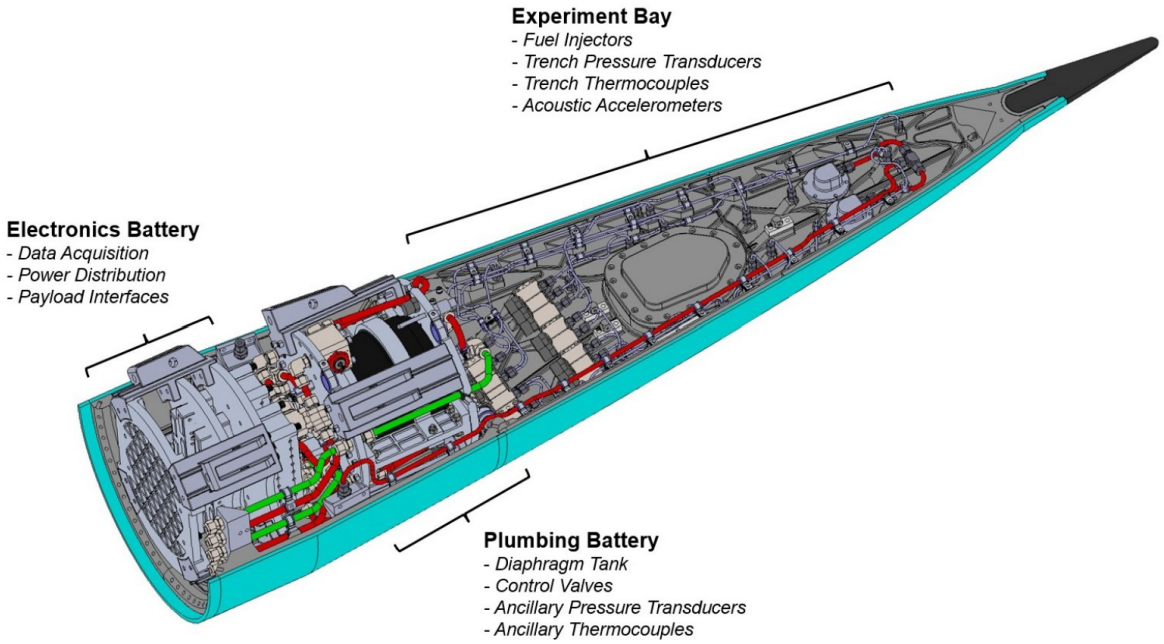

Internal subassembly locations: the electronics battery (data acquisition, power distribution, payload interfaces) sits aft of the experiment bay, next to the plumbing battery. Figure from Koller et al., AIAA SciTech 2026.

Publication

J. Koller, A. Shack, A. R. Kotler, S. Smith, Y. Fuentes, A. Siddiqi, **R. Fodor**, G. Gonzalez, J. D. Sprunger, and K. A. Ahmed, "MXOD Flight 1: Feed System and Electronics Architecture," *AIAA SciTech Forum*, 2026. doi:10.2514/6.2026-0346

Technical details continued on page 9 →

Instrumentation overview

Type	Vendor & model	Qty	Channels	Sampling rate
Trench pressure transducer	Honeywell 19mm Series	30	30	20 kHz
Trench thermocouple (coaxial)	Medtherm coaxial thermocouple, Type E	14	14	5 kHz
Trench thermocouple (single)	Medtherm coaxial thermocouple, Type E	8	8	5 kHz
Ancillary pressure transducer	Honeywell MLH Series	6	6	20 kHz
Ancillary thermocouple	OMEGA thermocouple probe, Type K	3	3	5 kHz
Acoustic accelerometer	Kistler miniature IEPE triaxial, 8768A	6	18	20 kHz
Current sensor	Allegro Microsystems ACS723	5	5	1 kHz
	Total	**72**	**84**	

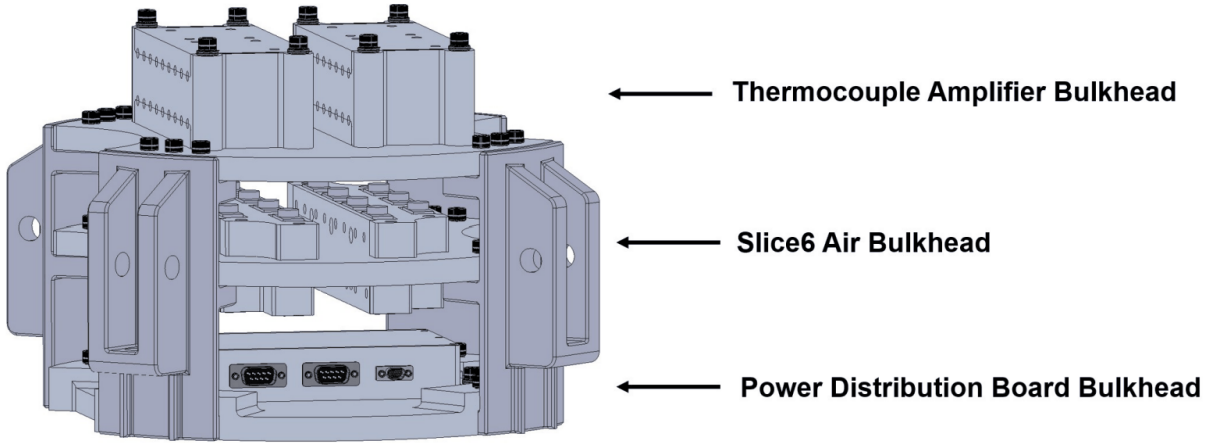

Electronics battery: thermocouple amplifier, SLICE6 AIR DAQ, and power distribution board bulkheads

Electronics subsystem specifications

Experiment		*Electronics subsystem*	
Mach at condition	9–10	SLICE6 AIR DAQ units	14
Altitude at condition	25–30 km	SLICE6 AIR ADC resolution	16 bit
Total instrumentation	72 sensors, 84 channels	Trench PT measurement range	0–100 psi
		Ancillary PT measurement range	0–5000 psi
		Trench thermocouples	Type E, 23.2–1170 K
		Ancillary thermocouples	Type K, 73.2–1530 K

See additional details

Paper: doi:10.2514/6.2026-0346

Additional Projects

Wearable IoT LED Earrings | *Personal Project*

Embedded Design | Low-Power RF | Battery-Powered Design | Embedded Antennas

Battery-powered LED earrings with embedded RF control, developed through multiple revisions from simple light-up prototypes. V2 fits an ESP32 with external flash, USB-C, battery management, protection circuitry, and a column of addressable LEDs onto one compact earring PCB, with a tuned pi network matching the embedded antenna.



LED earrings playing their idle animation



V2 assembled back, with battery

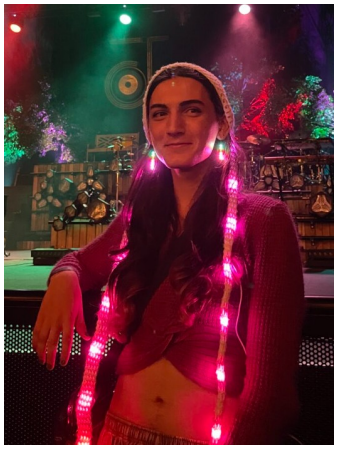

Wearing them at a Jacob Collier concert

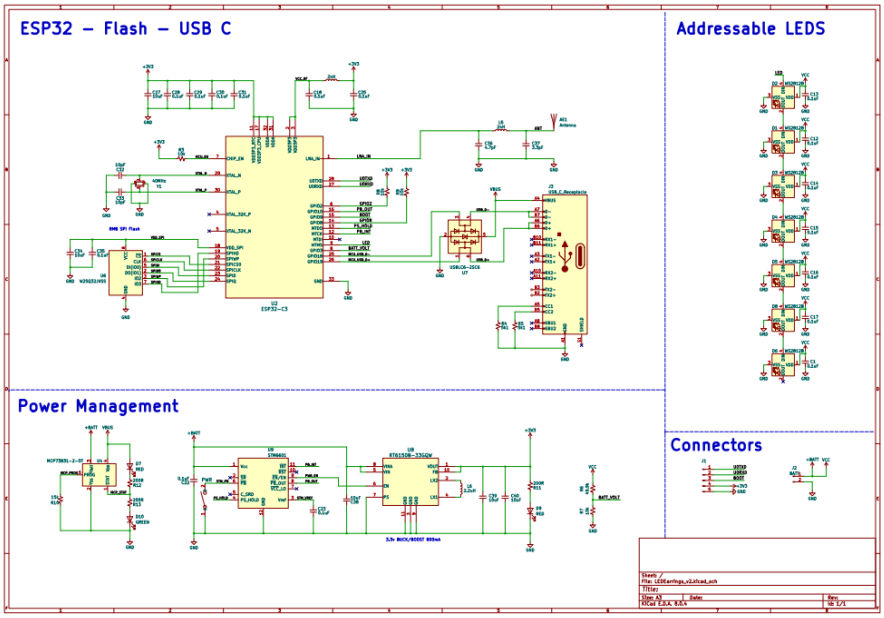

V2 schematic: ESP32, flash, USB-C, power management, addressable LEDs

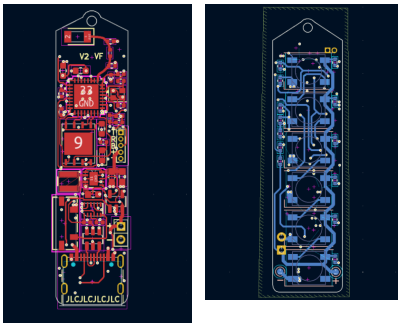

V2 top and bottom layers

See additional details

reverea.dev/led-earrings-v2